M9210-AGx-3 Floating Electric Spring Return Actuators

Installation Instructions

Part No. 34-636-1654, Rev. B
Issued May 13, 2011
Supersedes June 20, 2006

Refer to the QuickLIT Web site for the most up-to-date version of this document.

Applications

The M9210-AGx-3 Floating Actuators are direct-mount, spring return electric actuators that operate on AC/DC 24 V power. These bidirectional actuators do not require a damper linkage, and are easily installed on dampers with 1/2 to 3/4 in. or 12 to 19 mm round shafts, or 3/8 and 1/2 in. or 10, 12, and 14 mm square shafts using the standard shaft clamp included with the actuator. An optional M9220-600 Jackshaft Coupler Kit is available for 3/4 to 1-1/16 in. or 19 to 27 mm round shafts, or 5/8 and 3/4 in. or 16, 18, and 19 mm square shafts.

The M9210-AGx-3 Floating Electric Spring Return Actuators provide running and spring return torques of 89 lb·in (10 N·m). Integral line voltage auxiliary switches are available on the AGC model to indicate end-stop position, or to perform switching functions within the selected rotation range.

IMPORTANT: Use this M9210-AGx-3 Floating Electric Spring Return Actuator only to control equipment under normal operating conditions. Where failure or malfunction of the electric actuator could lead to personal injury or property damage to the controlled equipment or other property, additional precautions must be designed into the control system. Incorporate and maintain other devices, such as supervisory or alarm systems or safety or limit controls, intended to warn of or protect against failure or malfunction of the electric actuator.

Installation

The M9210-AGx-3 Floating Electric Spring Return Actuators mount directly to the surface in any convenient orientation using two M3 x 9.5 mm self-drilling sheet metal screws and the anti-rotation bracket (parts included with the actuator). No additional linkages or couplers are required. Electrical connections are color-coded and identified with numbers permanently marked on the actuator cable. A tag on the actuator cable identifies the electrical connections, and wiring details are also included on the actuator housing.

IMPORTANT: Do not install or use this M9210 AGx-3 Floating Electric Spring Return Actuator in or near environments where corrosive substances or vapors could be present. Exposure of the electric actuator to corrosive environments may damage the internal components of the device, and will void the warranty.

Parts Included

- floating electric spring return actuator with coupler
- anti-rotation bracket
- manual override crank
- two M3 x 9.5 mm self-drilling sheet metal mounting screws
- two No. 10-32 x 9/16 in. thread-forming conduit screws

Special Tools Needed

- torque wrench with 3/8 in. (10 mm) socket
- digital voltmeter or M9000-200 Commissioning Tool
- flat blade screwdriver

Johnson Controls

Dimensions

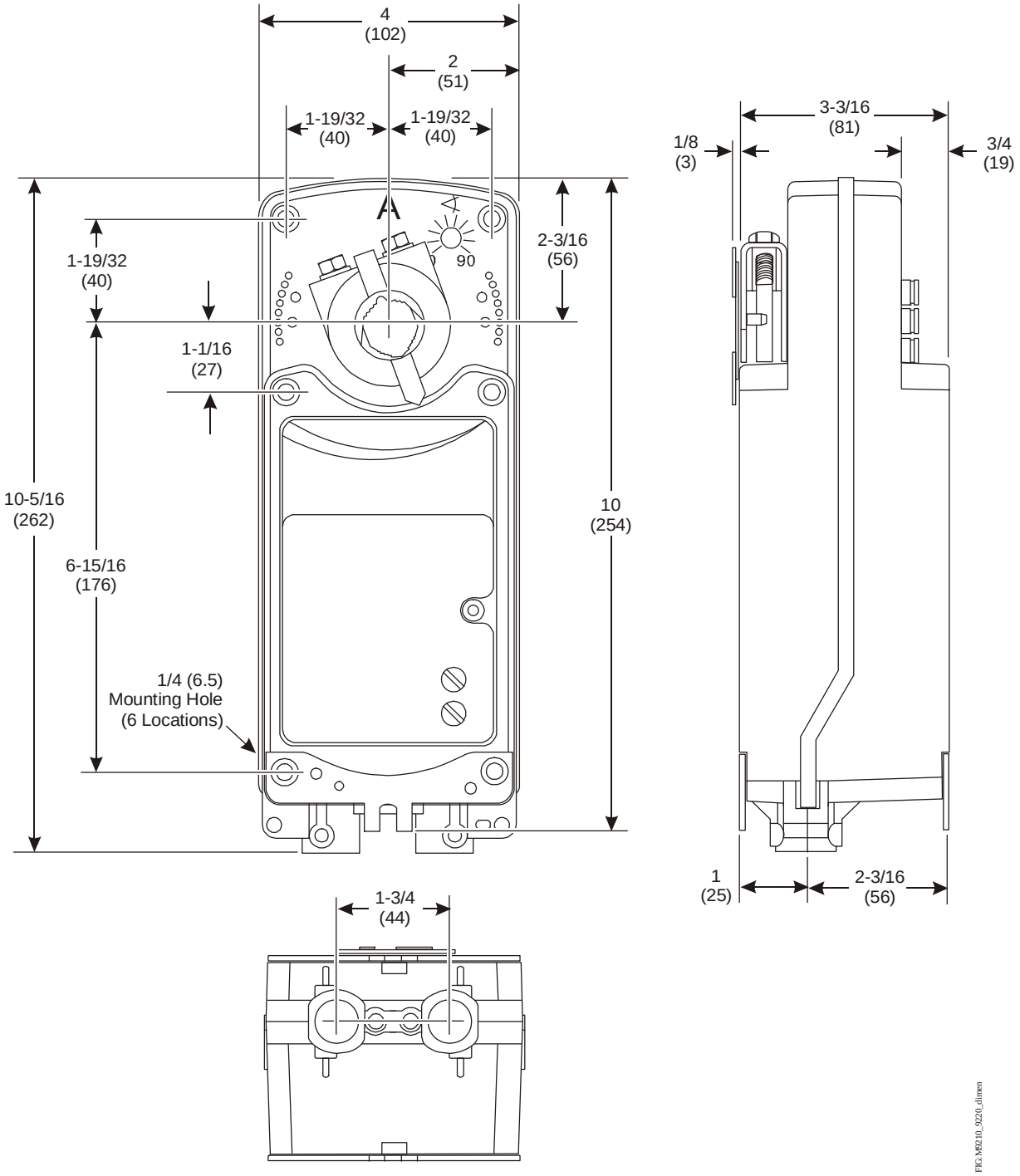

Figure 1: M9210-AGx-3 Floating Electric Spring Return Actuator Dimensions, in. (mm)

Accessories

Table 1: Accessories and Replacement Parts (Order Separately)

Code Number	Description
DMPR-KC003[1]	7 in. (178 mm) Blade Pin Extension (without Bracket) for Johnson Controls® Direct-Mount Damper Applications (quantity 5)
M9000-153	Crank arm (quantity 1)
M9000-170	Remote Mounting Kit, Horizontal. Kit includes Mounting Bracket, M9000-153 Crank Arm, Ball Joint, and Mounting Bolts (quantity 1)
M9000-171	Remote Mounting Kit, Vertical. Kit includes Mounting Bracket, M9000-153 Crank Arm, Ball Joint, and Mounting Bolts (quantity 1)
M9000-200	Commissioning Tool that Provides a Control Signal to Drive 24 V On/Off, Floating, Proportional, and/or Resistive Electric Actuators (quantity 1)
M9000-320	Weather Shield Enclosure - NEMA 3R enclosure for protecting a single M9210/20 actuator from rain, sleet, or snow (quantity 1)
M9000-400	Jackshaft Linkage Kit. Open-ended design enables clamping onto a jackshaft without requiring access to the ends of the jackshaft (quantity 1)
M9000-604	Replacement Anti-rotation Bracket Kit (with Screws) for M9210-AGx-3 Floating Electric Spring Return Actuators (quantity 1)
M9200-100	Threaded Conduit Adapter, 1/2 NPSM, for M9210(20) and M(VA)9208 Series Actuators (quantity 5)
M9220-600	1 in. (25 mm) Jackshaft Coupler Kit (with Locking Clip) for Mounting M9210-AGx-3 Floating Electric Spring Return Actuators on Dampers with 3/4 to 1-1/16 in. or 19 to 27 mm Round Shafts, or 5/8 and 3/4 in. or 16, 18, and 19 mm Square Shafts (quantity 1)
M9220-601	Replacement Coupler Kit (with Locking Clip) for Mounting M9210-AGx-3 Floating Electric Spring Return Actuators on Dampers with 1/2 to 3/4 in. or 12 to 19 mm Round Shafts, or 3/8 and 1/2 in. or 10, 12, and 14 mm Square Shafts (quantity 1)
M9220-602	Replacement Locking Clips for M9210-AGx-3 Floating Electric Spring Return Actuators (Five per Bag)
M9220-603	Adjustable Stop Kit for M9210-AGx-3 Floating Electric Spring Return Actuators (quantity 1)
M9220-604	Replacement Manual Override Cranks for M9210-AGx-3 Floating Electric Spring Return Actuators (Five per Bag)
M9220-610	Replacement Shaft Gripper, 10 mm Square Shaft with Locking Clip (quantity 1)
M9220-612	Replacement Shaft Gripper, 12 mm Square Shaft with Locking Clip (quantity 1)
M9220-614	Replacement Shaft Gripper, 14 mm Square Shaft with Locking Clip (quantity 1)

1. Furnished with the damper and may be ordered separately.

Mounting

The M9210-AGx-3 Floating Electric Spring Return Actuators can be easily installed on dampers with 1/2 to 3/4 in. or 12 to 19 mm round shafts, or 3/8 and 1/2 in. or 10, 12, and 14 mm square shafts. An M9220-600 Jackshaft Coupler Kit is available for 3/4 to 1-1/16 in. or 19 to 27 mm round shafts, or 5/8 and 3/4 in. or 16, 18, and 19 mm square shafts; see Table 1 for more details. If the damper shaft extends less than 3-19/32 in. (91 mm), see the *Removable Coupler* section for further instructions. If the damper shaft extends less than 1-5/32 in. (29 mm), install an extension recommended by the damper manufacturer.

Counterclockwise (CCW) Spring Return Direction – Clockwise (CW) Powered Operation

For CCW spring return direction, mount the actuator to the damper shaft so that Side A of the actuator is away from the damper as illustrated in Figure 2. With power applied, the actuator drives CW from the 0° position, and spring returns CCW.

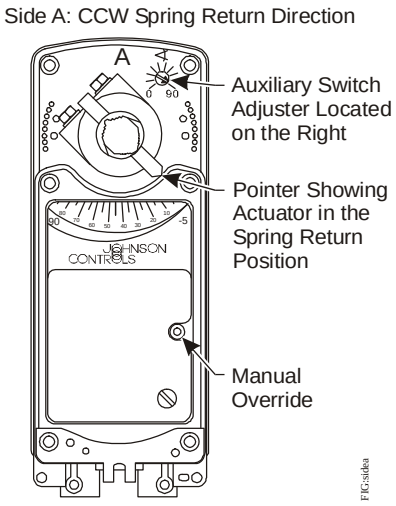

Figure 2: Side A of Actuator

Clockwise (CW) Spring Return Direction – Counterclockwise (CCW) Powered Operation

To change the spring return direction to CW, mount the actuator to the damper shaft so that Side B of the actuator is away from the damper as illustrated in Figure 3. With power applied, the actuator now drives CCW from the 0° position, and spring returns CW.

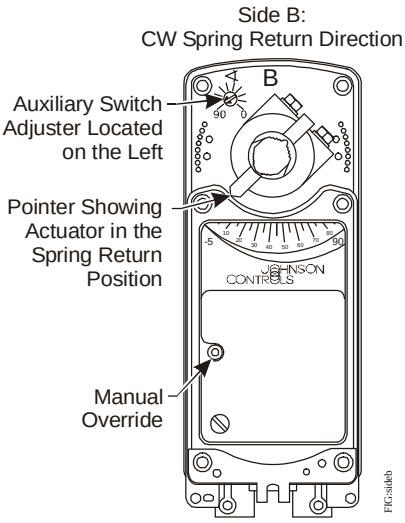

Figure 3: Side B of Actuator

Removable Coupler

The coupler may be installed on either side of the output hub. If the damper shaft is less than 3-19/32 in. (91 mm) long, insert the coupler in the face of the actuator closest to the damper. If the damper shaft is shorter than 1-5/32 in. (29 mm) long, a shaft extension is required to mount the actuator.

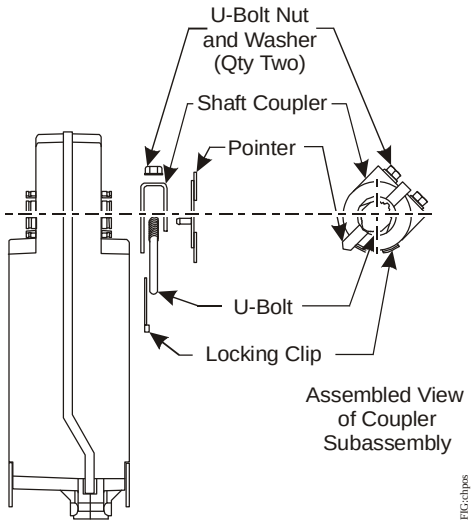

Figure 4: Changing the Position of the Coupler

To change the position of the coupler, see Figure 4 and proceed as follows:

1. Mount the coupler on either Side A or Side B of the actuator, as determined by the shaft length.
2. Snap the locking clip securely into the coupler retention groove to retain the coupler.

Manual Override

Use only the supplied manual override crank to reposition the actuator hub when using the manual override feature.

> **IMPORTANT:** Applying excessive torque to the manual override or running the manual override with a power tool may damage the internal components of the actuator and cause premature failure.

To reposition the actuator hub, proceed as follows:

1. De-energize the actuator.
2. Insert the hex end of the manual override crank into the manual override adjustment point on the face of the actuator.
3. Rotate the manual override crank in the direction indicated by the arrow on the label.

Note: The actuator requires 27 rotations of the manual override crank from the fully spring return position to fully reposition the actuator hub. At the end of travel, the rotational resistance increases; do not force the actuator hub past this point.

4. Rotate the manual override crank a half turn in the opposite direction to lock the actuator hub in place.

   Note: To unlock the actuator hub, rotate the manual override crank in the direction indicated by the arrow on the label. The actuator hub automatically unlocks when power is applied to the actuator, and returns the actuator to normal drive and spring return operation.

Mounting the Actuator

To mount the actuator, proceed as follows:

1. See the dimensions in Figure 5 and Table 2 to ensure the correct positioning of the anti-rotation bracket.

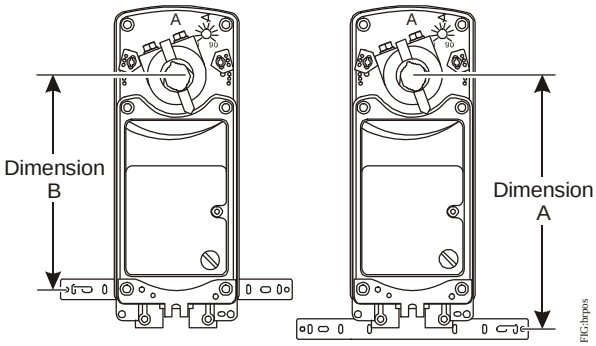

Figure 5: Positioning the Anti-rotation Bracket (See Table 2.)

Table 2: Dimensions from Anti-rotation Bracket to Shaft Center

Shaft Diameter	Dimension A, in. (mm)	Dimension B, in. (mm)
1/2 to 9/16 in. (12 to 14 mm)	8-9/32 (210)	7 (178)
5/8 to 3/4 in. (16 to 19 mm)	8-5/32 (207)	6-29/32 (175)

IMPORTANT: The tab on the anti-rotation bracket must fit midpoint in the actuator slot. Positioning the tab midpoint in the slot prevents actuator binding and premature wear, and makes actuator removal easier.

2. Bend or cut the anti-rotation bracket to fit the damper frame or duct as illustrated in Figure 6.

   Note: The anti-rotation bracket can be bent to fit a round damper.

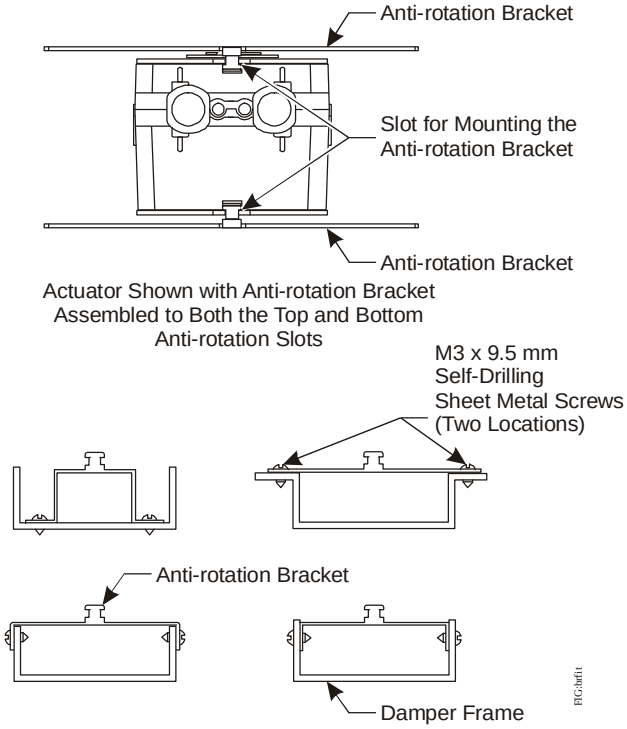

Figure 6: Fitting the Anti-rotation Bracket on the Damper Frame or Duct

3. Drill mounting holes in the damper frame or duct using the anti-rotation bracket as a guide (based on the measurements obtained in Table 2 and Figure 5).
4. Secure the anti-rotation bracket to the damper frame or duct using the two M3 x 9.5 mm self-drilling sheet metal screws provided and a 1/4 in. (6 mm) blade screwdriver or 5/16 in. (8 mm) nut driver.

IMPORTANT: Do not overtighten the mounting screws to avoid stripping the threads. Be certain that the tab on the anti-rotation bracket remains properly positioned in the slot on the actuator, and that the actuator remains parallel to the mounting surface.

5. Slide the actuator onto the damper shaft, and position the tab of the anti-rotation bracket into the slot at the bottom of the actuator as illustrated in Figure 6.

6. Rotate the damper blades to the desired position if the power is lost. To ensure a tight seal, insert the manual override crank and turn it in the direction indicated by the arrow on the label five turns; the position indicator should be near the 0° position on the scale. Quickly rotate the manual override crank a half turn in the opposite direction to temporarily lock the actuator hub in place.
7. Evenly hand tighten each clamp nut onto the U-bolt, keeping the actuator flat. Secure the U-bolt to the damper shaft and tighten to a torque of 100 to 125 lb·in (11 to 14 N·m).
8. To release the spring, turn the manual override crank in the direction indicated on the label; the actuator spring returns to its starting position. If this step is omitted, the spring releases automatically when power is applied to the actuator.
9. Remove the manual override crank and store it in an unused mounting hole.
10. Apply power long enough for the actuator to travel a full stroke, and verify that the actuator rotates freely throughout the range.

    Note: If electric power is not available, complete this verification by reinserting the manual override crank and turning it in the direction indicated to rotate the coupler to the fully open position.

Rotation Range Using Optional M9210-603 Adjustable Stop Kit

The actuator is factory set for 90° rotation, and its rotation range is limited in 5° increments to a minimum of 30°. Stroke limiting stops are attached in the field to the shaft coupler side of the actuator to reduce the rotation range. Attaching a stroke limiting stop in the farthest mounting position reduces the rotation range of the actuator by 5°. Each progressive mounting position reduces the rotation range an additional 5°.

1. Check that the damper blade is accessible or that its position is permanently marked on the end of the damper shaft as illustrated in Figure 7.

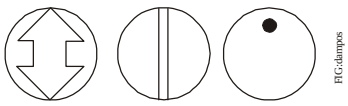

Figure 7: Damper Position Icons

2. Determine the desired rotation range. If a 65 to 90° rotation range is desired, add one stroke limiting stop. If a 35 to 60° rotation range is desired, add two stroke limiting stops.

   Note: If two stroke limiting stops are applied, use the manual override crank to position and lock the actuator in a mid-stroke position to gain access to both stroke limiting stop mounting positions.
3. Mount the stroke limiting stops in the desired position using the two M4 x 10 mm self-tapping screws provided. Tighten the screws to a torque of 35 lb·in (4 N·m).
4. Manually reposition the coupler so that the coupler set screw aligns with the nodule guide that corresponds to the value determined in Step 2.

   Example:

   For a rotation range of 65°, mount one stroke limiting stop in the minimum stroke position as illustrated in Figure 8.

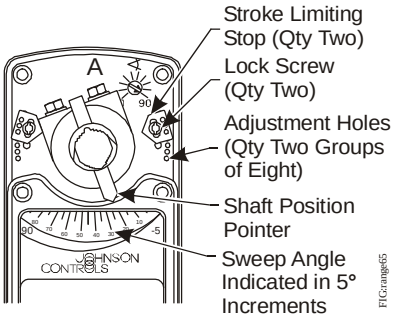

Figure 8: One Stroke Limiting Stop Mounted in the Minimum Stroke Position for a Rotation Range of 65°

Wiring

The M9210-AGx-3 Floating Electric Spring Return Actuator provides reliable, integrated damper control. When AC 24 V at 50/60 Hz or DC 24 V power is applied between the black and red wires, and power is applied to a gray or orange control wire, the output hub rotates from -5 to 90°, based on the Reverse Acting (RA)/Direct Acting (DA) setting (unless an external mechanical limit is reached).

Once the command to rotate is removed, the actuator holds its position until either another command to rotate is applied or until all power is removed. When power is removed, the actuator spring returns to its -5° position (unless an external mechanical limit is reached). A stall condition while driving between -5 to 90° causes the output hub to stop motion and hold its position until power is removed. Rotation is mechanically limited to the -5 and 90° positions by integral end-stops. Optional end-stops are available to limit the output hub travel. An anti-rotation bracket prevents rotational movement of the actuator body.

See Figures 9 and 10 for proper wiring of the M9210-Bxx-3 Series On/Off Electric Spring Return Actuator.

CAUTION: Risk of Electric Shock. Disconnect the power supply before making electrical connections to avoid electric shock.

CAUTION: Risk of Property Damage. Do not apply power to the system before checking all wiring connections. Short circuited or improperly connected wires may result in permanent damage to the equipment.

IMPORTANT: Make all wiring connections in accordance with local, national, and regional regulations. Do not exceed the electrical ratings of the M9210-AGx-3 Floating Electric Spring Return Actuator.

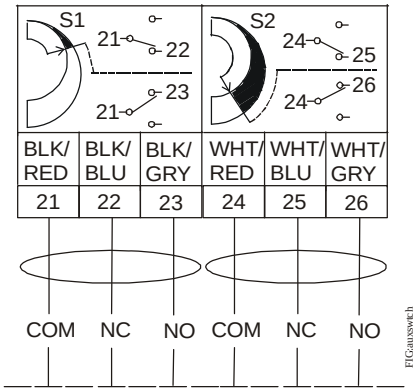

Figure 9: Auxiliary Switch Wiring Diagram for AGC Model

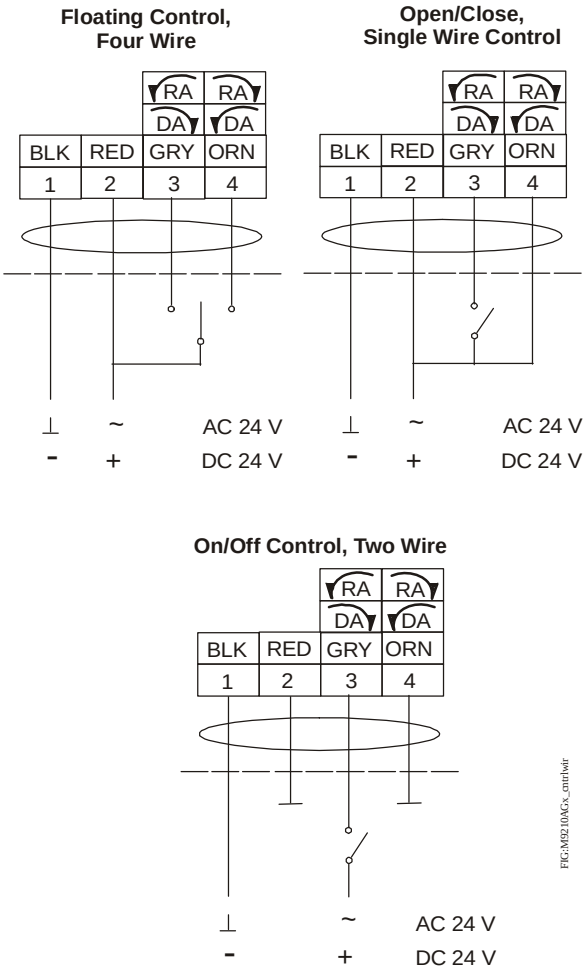

Figure 10: Control Wiring Diagrams

Setup and Adjustments

Direction of Action

The M9210-AGx Floating Electric Spring Return Actuators are factory set for Direct Acting operation, but may also be switched to Reverse Acting operation. A control input drives the actuator.

Figure 11 and Figure 12 indicate how the drive direction for the actuator depends on the spring return direction and the position of the mode selection switch.

Control Inputs				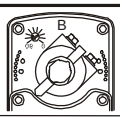	
		CCW Face of Actuator		CW Face of Actuator	
		Mode Selection Switch Setting			
GRY 3	ORN 4	DA	RA	RA	DA
CLOSED	OPEN	CW	CCW	CW	CCW
OPEN	CLOSED	CCW	CW	CCW	CW
OPEN	OPEN	Holds Position			
CLOSED	CLOSED	CW	CCW	CW	CCW

FIG:DRVPOS_AGx

Figure 11: Settings for Drive Direction

Mode Selection Switch

The M9210-AGx-3 Floating Electric Spring Return Actuators are factory set at DA, 90° of travel as illustrated in Figure 12. To reverse the rotation, either move the mode selection switch from Direct Acting (DA) to Reverse Acting (RA), or reverse the control input wiring to GRY 3 and ORN 4 (as illustrated in Figure 10).

Side A of Actuator Side B of Actuator

FIG:AGx_modsel

Figure 12: Mode Selection

Auxiliary Switches (AGC Model Only)

The AGC model includes two integral auxiliary switches with a switch adjuster accessible on either face of the actuator (as illustrated in Figure 2 and Figure 3). The nominal factory setting for Auxiliary Switch No. 1 is 11° closing, and the nominal factory setting for Auxiliary Switch No. 2 is 81° opening (relative to a 0 to 90° rotation range). See the *Technical Specifications* table for the auxiliary switch ratings.

WARNING: Risk of Electric Shock. Disconnect or isolate all power supplies before making electrical connections. More than one disconnect or isolation may be required to completely de-energize equipment. Contact with components carrying hazardous voltage can cause electric shock and may result in severe personal injury or death.

The switch point of Auxiliary Switch No. 1 is fixed. The switch point of Auxiliary Switch No. 2 is independently and continuously adjustable from 25 to 95°. See Figure 13 and use the method in the following example for the most accurate positioning of Auxiliary Switch No. 2.

To change the switch point of Auxiliary Switch No. 2:

1. Move the actuator to the full spring return position.

   Note: Auxiliary Switch No. 2 is factory set to trip when the actuator reaches the 81° position (approximately).

2. Rotate the switch adjuster until it points to the desired switch point.

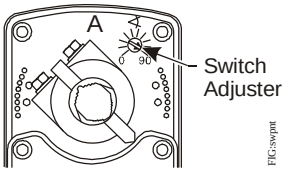

FIG:swpnt

Figure 13: Switch Point Settings

3. Connect Auxiliary Switch No. 2 to a power source or an ohmmeter, and apply power to the actuator. The actuator moves to the fully open position and holds while power is applied.
4. Observe the switch point. If required, repeat Steps 2 and 3.

Repairs and Replacement

A number of replacement parts are available; see Table 1 for more details. If the M9210-AGx-3 Floating Electric Spring Return Actuator fails to operate within its specifications, replace the unit. For a replacement electric actuator, contact the nearest Johnson Controls® representative.

Technical Specifications

M9210-AGx Floating Electric Spring Return Actuators (Part 1 of 2)

Power Requirements		AC 24 V (19.2 to 30 V) at 50/60 Hz: Class 2 (North America) or SELV (Europe), 9.6 VA Running, 6 VA Holding Position; DC 24 V (21.6 to 26.4 V); Class 2 (North America) or SELV (Europe), 3.9 W Running, 2.1 W Holding Position
Transformer Sizing Requirements		15 VA Minimum per Actuator
Input Signal		AC 19.2 to 30 V at 50/60 Hz or DC 24 V ±10%, Class 2 (North America) or SELV (Europe), 500ms minimum pulse width
Auxiliary Switch Rating	**AGC Model**	Two Single-Pole, Double-Throw (SPDT), Double-Insulated Switches with Gold Flash Contacts: AC 24 V, 50 VA Pilot Duty; AC 120 V, 5.8 A Resistive, 1/4 hp, 275 VA Pilot Duty; AC 240 V, 5.0 A Resistive, 1/4 hp, 275 VA Pilot Duty
Spring Return		Direction is Selectable with Mounting Position of Actuator: Side A, Actuator Face Away from Damper for CCW Spring Return; Side B, Actuator Face Away from Damper for CW Spring Return
Running and Spring Return Torque		89 lb·in (10 N·m)
Rotation Range		Adjustable from 30 to 90° CW or CCW with Optional M9210-603 Adjustable Stop Kit; Mechanically Limited to 90°
Rotation Time	**Power On (Running)**	150 Seconds for 0 to 89 lb·in (0 to 10 N·m) at All Operating Conditions
	Power Off (Spring Returning)	26 Seconds for 0 to 89 lb·in (0 to 10 N·m) at Room Temperature
Cycles		60,000 Full Stroke Cycles; 1,500,000 repositions
Audible Noise Rating	**Power On (Running)**	<40 dBA at 39-13/32 in. (1 m)
	Power On (Holding)	<20 dBA at 39-13/32 in. (1 m)
	Power Off (Spring Returning)	<55 dBA at 39-13/32 in. (1 m)
Electrical Connections	**Actuator (All Models)**	48 in. (1.2 m) Halogen-Free Cable with 18 AWG (0.75 mm^2) Wire Leads
	Auxiliary Switches (AGC Model)	48 in. (1.2 m) Halogen-Free Cable with 18 AWG (0.75 mm^2) Wire Leads
Conduit Connections		Integral Connectors for 3/8 in. Flexible Metal Conduit

M9210-AGx Floating Electric Spring Return Actuators (Part 2 of 2)

Mechanical Connections	**Standard Shaft Clamp Included with Actuator**	1/2 to 3/4 in. or 12 to 19 mm Diameter Round Shafts, or 3/8 and 1/2 in. or 10, 12, and 14 mm Square Shafts
	Optional M9220-600 Jackshaft Coupler Kit	3/4 to 1-1/16 in. or 19 to 27 mm Diameter Round Shafts, or 5/8 and 3/4 in. or 16, 18, and 19 mm Square Shafts
Aluminum Enclosure		NEMA 2 (IP54) for All Mounting Orientations
Ambient Conditions	**Operating**	-40 to 131°F (-40 to 55°C); 90% RH Maximum, Noncondensing
	Storage	-85 to 185°F (-65 to 85°C); 95% RH Maximum, Noncondensing
Dimensions		See Figure 1.
Compliance	**United States**	UL Listed, CCN XAPX, File E27734; to UL 60730-1A: 2003-08, Ed. 3.1, Automatic Electrical Controls for Household and Similar Use; and UL 60730-2-14: 2002-02, Ed. 1, Part 2, Particular Requirements for Electric Actuators. (Models: All)
	Canada	UL Listed, CCN XAPX7, File E27734; to UL 60730-1:02-CAN/CSA: July 2002, 3rd Ed., Automatic Electrical Controls for Household and Similar Use; and CSA C22.2 No. 24-93 Temperature Indicating and Regulating Equipment (Models: All).
CE	**Europe**	CE Mark – Johnson Controls, Inc., declares that this product is in compliance with the essential requirements and other relevant provisions of the EMC Directive 2004/108/EC and Low Voltage Directive 2006/95/EC.
	Australia and New Zealand	C-Tick Mark, Australia/NZ Emissions Compliant (Models: All)
Shipping Weight		6.4 lb (2.9 kg)

The performance specifications are nominal and conform to acceptable industry standards. For application at conditions beyond these specifications, consult the local Johnson Controls office. Johnson Controls, Inc. shall not be liable for damages resulting from misapplication or misuse of its products.

Building Efficiency
507 E. Michigan Street, Milwaukee, WI 53202

Metasys® and Johnson Controls® are registered trademarks of Johnson Controls, Inc.
All other marks herein are the marks of their respective owners. © 2011 Johnson Controls, Inc.

Published in U.S.A. www.johnsoncontrols.com